Pioneer Eclipse
An AMANO Company

UHS Battery Burnisher
PE350BU
Operator's Manual

Instructions For Use

Failure to read and understand this manual before operating this machine or performing service on this machine may result in injury to the operator or nearby personnel or result in damage to the machine or nearby property. Each operator must be trained in the operation of this machine before being allowed to use it. Contact Amano Pioneer Eclipse Customer Service at 1-800-367-3550 or +1-336-372-8080 or an authorized Amano Pioneer Eclipse Distributor to inquire about training or to request a replacement manual.

NOTICE

Proper maintenance is necessary with all battery powered floor machines. Following the scheduled maintenance procedures found in your operation manual will provide many years of uninterrupted service.

Pioneer Eclipse
An AMANO Company

In addition to the scheduled maintenance procedures listed it is recommended to have your machine serviced by certified service personnel every three months.

! FOR YOUR SAFETY !

DO NOT store or use gasoline or other flammable vapors and liquids in the vicinity of this or any or other appliance.

Record This Important Information

Date of Purchase _____

Purchased From _____

Address _____

City_____ State_____ Zip _____

Phone _____ Contact _____

Machine Model _____

Machine Serial Number _____

Important Phone Numbers

Medical Emergency _____

Police _____

Fire Department _____

In this Operation Manual you will find three statements that you must read and observe to ensure safe operation of this machine.

DANGER! indicates that the possibility of severe bodily injury or death can occur if DANGER! statements are ignored. Read and observe all DANGER! statements included in the Operation Manual and attached to the machine.

WARNING! indicates that the possibility of bodily injury to the operator and other people can occur if WARNING! statements are ignored. Read and observe all WARNING! statements included in the Operation Manual and attached to the machine.

CAUTION! indicates that the possibility of damage to the machine or other property can occur if CAUTION! statements are ignored. Read and observe all CAUTION! statements included in the Operation Manual and attached to the machine.

Table of Contents

Safety Precautions 6
Machine Preparation 8
Machine Components 10
Battery Charger Fault Codes 13
Operating the Machine 14
Maintenance 16
Controller Errors 17
Troubleshooting 18
Machine Specifications 19
Parts Manual 20
Electrical Schematic 21

Quick Reference

Specifications:

- Battery: (1) 48V, 177 Ah, Lithium Ion
- Burnish Rate: 36,400 ft^2/hr (3382 m^2/hr)
- Overload Protection: Resettable Breakers
- Operating Time: Approximately 2-2.5 hours
- Pad Pressure: Adjustable

Routine Maintenance Parts:

- Cloth Dust Bag: MP469300
- Pad Holder: MP032500
- Pad Retainer: MP012700
- 3A Glass Fuse: MP234700
- Skirt Edging: MP139800 - 8 ft (244 cm)
- Motor Brush Kit: MP433200

Your Authorized Amano Pioneer Eclipse Distributor: _____

Authorized Amano Pioneer Eclipse Distributor Phone Number: _____

Amano Pioneer Eclipse Phone Number: +1-336-372-8080

WARNING!

Read all safety warnings, instructions, illustrations and specifications provided with this power tool. Failure to follow all instructions listed below may result in electric shock, fire and/or serious injury.

WARNING!

The Products sold with this Manual contain or may contain chemicals that are known to certain governments (such as the State of California, as identified in its Proposition 65 Regulatory Warning Law) to cause cancer, birth defects or other reproductive harm. In certain locations (including the State of California) purchasers of these Products that place them in service at an employment job site or a publicly accessible space are required by regulation to make certain notices, warnings or disclosures regarding the chemicals that are or may be contained in the Products at or about such work sites. It is the purchaser's responsibility to know the content of, and to comply with, any laws and regulations relating to the use of these Products in such environments. The Manufacturer disclaims any responsibility to advise purchasers of any specific requirements that may be applicable to the use of the Products in such environments.

Safety Precautions

Anyone operating the machine should read the following carefully and be informed of potentially dangerous operating conditions. Operators should be familiar with the location and use of all safety devices on the machine. DO NOT use the machine if it is not in proper operating condition, and report any damage or operation faults immediately.

DANGER! This machine has parts including the pad assembly that can cause severe injury if these parts are contacted while they are moving. **DO NOT** allow any part of the body or clothing to come in contact with these parts while they are moving. **DO NOT** try to change the pad while the machine is running. **DO NOT** allow other people to come near the machine while it is in operation. **DO NOT** allow the machine to run unattended. **DO NOT** leave the machine in a place where unauthorized or untrained personnel could use the machine. **DO NOT** run the machine with the pad off center, damaged or missing. **DO NOT** operate the machine if the machine has loose parts.

DANGER!

A. Electrocution could occur if the machine is being serviced while the machine is connected to a powersource Disconnect the power supply before servicing.

B. Electrocution or fire could occur if the machine is being charged with a damaged power cord. **DO NOT** move the machine by the power cord.

C. Shock hazard. **DO NOT** use the machine if it has been rained on or sprayed with water.

DANGER! The battery emits hydrogen gas. Explosion or fire can result. Keep sparks and open flame away. Keep covers open when charging. **DO NOT** smoke around batteries. In the event of a machine or battery fire, the fire may be extinguished with an ABC fire extinguisher. Contact your local fire marshal or governing authority for more information.

WARNING! This machine contains a Lithium Iron Phosphate, (LFP), battery. **DO NOT** disassemble battery or use in series or parallel with other batteries. **DO NOT** misuse or drop the battery. **DO NOT** charge in a sealed container. **DO NOT** short circuit the battery terminals. **DO NOT** incinerate, crush, or puncture battery. Only use charger supplied with the machine.

WARNING! Operate from the rear of the machine only.

WARNING! Inspect pad holder regularly. A fractured pad holder may result in pad fragments causing injury.

WARNING! Use caution when operating the machine on a ramp or incline. **DO NOT** turn the machine, or leave it unattended, on a ramp or incline.

WARNING! Store machine inside. Keep the electrical components of the machine dry. **DO NOT PRESSURE WASH MACHINE**.

WARNING! Modifications or alterations to this machine can lead to personal injury or damage to the machine. **DO NOT** make unauthorized modifications or alterations to this machine. Amano Pioneer Eclipse assumes no liabilities for injury or damage resulting from an unauthorized modification or alteration to the machine. Any unauthorized modification or alteration to this machine voids all warranties.

WARNING! The motor, motor controller, and charger become hot enough to cause severe burns. **DO NOT** touch these parts of the machine until they have cooled.

WARNING! Injury can occur to the eyes and body while using the machine. Safety goggles, safety shoes, and safety clothing are recommended while operating the machine.

WARNING! Machine vibration may cause tingling or numbness in the fingers or hands. Gloves are recommended to reduce machine vibration. If tingling or numbness persists, shut off the machine. If the vibration is caused by loose parts such as an off center pad, adjust or tighten these parts before using the machine again.

WARNING! Do not charge the battery with damaged cord. Do not modify the plug. If the charger cord is damaged, it must be replaced.

WARNING! Electrocution, fire, or property damage may occur, if machine is not properly grounded and connected to the power supply.

WARNING! DO NOT burnish on an incline. This machine is designed to burnish on a flat level floor.

CAUTION! Before starting machine ensure all safety devices are in place and functioning properly. Before starting machine check for proper operation.

CAUTION! When moving machine, go slowly on inclines. Use care when operating machine in reverse

CAUTION! DO NOT operate machine unless trained and authorized. **DO NOT** operate machine unless you have read and understand the operation manual. **DO NOT** operate machine in flammable or explosive areas.

CAUTION! When servicing machine, stay clear of moving parts. **DO NOT** wear loose clothing when working on machine. Block machine wheels before raising or jacking up machine. Use hoist stands that will support the weight of the machine. Wear eye and ear protection when using pressurized air. Disconnect battery connections before servicing machine. Use only replacement parts supplied by Amano Pioneer Eclipse or a Amano Pioneer Eclipse Authorized Distributor or Service Center.

This machine is manufactured for commercial use only.

This machine is designed and manufactured for burnishing indoor hard floor surfaces. Amano Pioneer Eclipse does not recommend use of this machine in any environment other than an indoor environment.

Battery powered floor equipment is designed and manufactured for commercial use only. These machines are designed to burnish most modern types of floors including composition tile, stone, marble, terrazzo, and resilient floor covering, and some coated wood floors.

These machines should not be used

- By unqualified or untrained personnel.
- Unless properly maintained and adjusted.
- On areas with obstructions such as thresholds, floor outlet boxes, etc.
- In areas where loose debris or other objects are present.

Operator Responsibility

The operator is responsible for performing the recommended daily maintenance and checkups of the machine to keep it in good working condition. The operator must inform the service mechanic or supervisor when recommended maintenance procedures are required as described in the *"MAINTENANCE"* section of this manual.

- Read this manual carefully before operating this machine.
- FOR SAFETY: **DO NOT** operate machine before reading and understanding the operation manual.
- Check the machine for shipping damage.

Keep your machine regularly maintained by following the maintenance information in this manual. Order parts and supplies only from an Authorized Amano Pioneer Eclipse Distributor. Use the parts illustration section of your manual when ordering parts. During and after operation, perform the recommended daily and hourly procedures outlined in the Maintenance Chart.

Test for Operator-Ear Sound Pressure Level

Amano Pioneer Eclipse measures and rates the operator-ear sound pressure level for hand-guided floor treatment and floor cleaning machines for industrial use. All tests are performed in accordance with European Machinery Directive (2006/42/EC).

- Outdoor test area consists of a flat open space free from effects of signboards, buildings or hillsides for at least 15 m (50 ft) from the center of the test surface. Indoor tests are conducted in a semi-anechoic or sound deadening room.
- The test surface is a single sheet of floor covering at least 1 m (3.3 ft) wider and longer than the equipment being tested. In order to not affect the sound reading, the observer taking readings is at least 2 m (6.6 ft.) from the equipment being tested, or standing directly behind the operator.
- All machines are tested while stationary and centered on the test surface. With the traction drive in neutral (where applicable) the test is conducted with the machine at maximum engine or motor speed as specified by the manufacturer.
- The operator is located in the normal operating position with the microphone or meter supported independent of the machine, 1,68 m (66 in) above the test surface, 25 cm (10 in) to the right and left centerline of the operators position, and 20 cm (8 in) to the rearmost point of the handle, with the handle in the most forward position.
- The sound level meter is observed for a minimum of 5 seconds or until a stabilized reading is obtained. The maximum repeatable sound level observed during the test at each microphone position is recorded and documented.

Test for Hand-Arm Vibration at the Grip Surface of Hand-Guided Machinery

Amano Pioneer Eclipse measures and rates the vibration at the machine-hand contact surface of hand-guided machines that are provided with handles in accordance with European Machinery Directive (2006/42/EC).

- The test area consists of a flat open floor area that allows the machine to be operated normally.
- The transducer is mounted firmly at a point halfway along the length of the handle where the handle would normally be held.
- Machines are tested while stationary, with all mechanisms necessary for the equipment to perform its intended functions engaged and the traction drive in neutral (if applicable). The machine will be tested at maximum engine or motor speed as specified by the manufacturer of the subject machine.
- The measurements are recorded from the dominant axis.

Machine Preparation

Unpacking the Machine

The machine is shipped boxed on a wooden pallet. To unpack machine:

1. Cut and remove bands holding the box to the pallet.
2. Remove staples attaching the box to the platform at the bottom edge of the box.
3. With two people, one at either end of the box, lift box straight up and off machine.
4. Cut and remove bands securing the machine to the pallet.
5. Remove steel shipping brackets from machine and pallet.
6. Carefully back the machine off the pallet.

Machine Storage

1. Machine should be stored in a dry environment.
2. Store machine away from objects that may fall and damage it.
3. Never store burnisher near an open flame or heat producing device.
4. Make sure burnisher is cleaned properly by wiping machine down with damp cloth before storing.

CAUTION! *NEVER PRESSURE WASH MACHINE!*

5. Disconnect battery before storage.

Repacking the Machine

Refer to Unpacking section on page 8 and repack machine using original packing materials and container.

Transporting the Machine

When shipping the machine, make sure the battery is disconnected and the machine is secured in the transporting vehicle.

Parts List

ITEM	QTY	PART NUMBER	DESCRIPTION
1	4	920342	NUT LK 3/8 -16 REG
2	2	BX015100	BRKT, 350BU SHIPPING
3	8	NB3450	WASHER, FLAT, 3/8"
4	4	NB9575	BOLT, HEX, 3/8-16 X 1 1/2

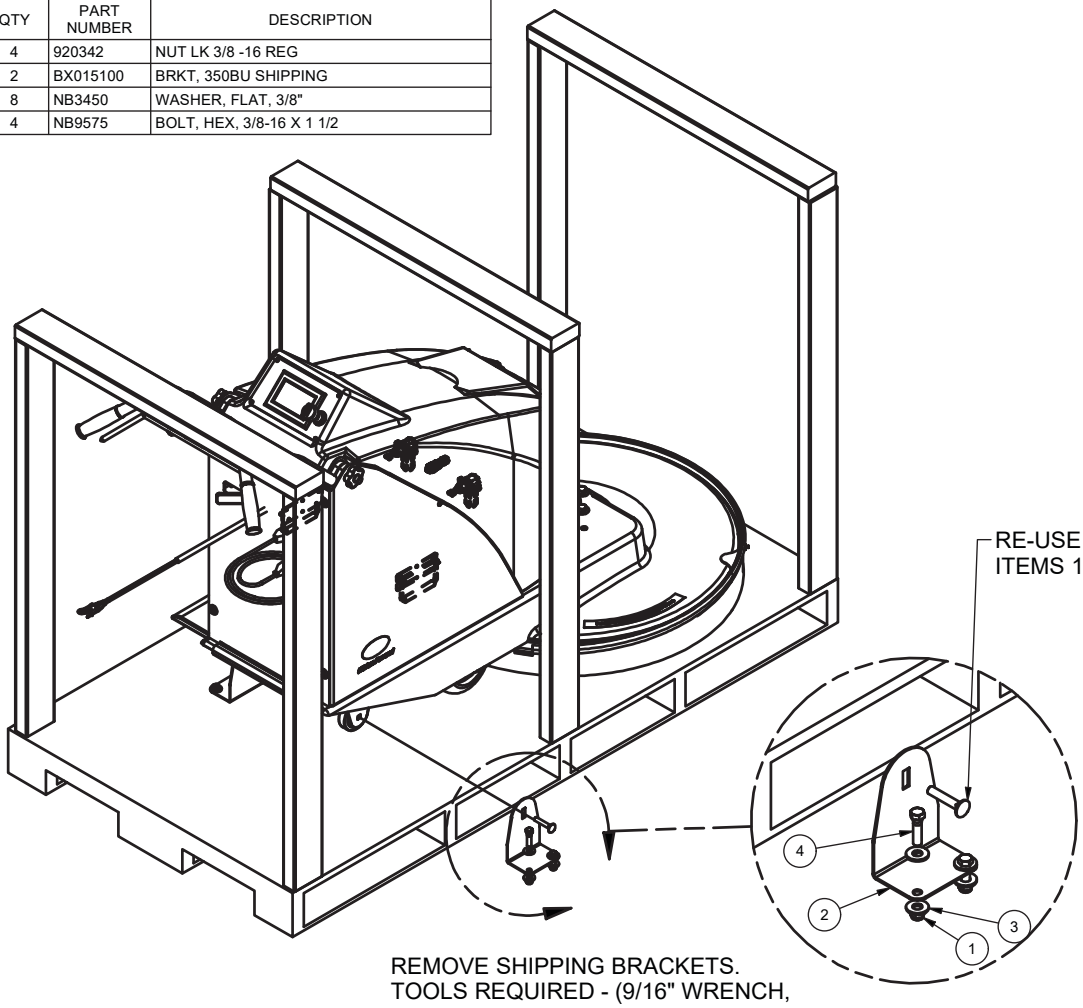

REMOVE SHIPPING BRACKETS.
TOOLS REQUIRED - (9/16" WRENCH, RATCHET w/ 9/16" SOCKET)

Connecting the Battery

1. Remove the two screws that secure the battery cover. Raise the cover.

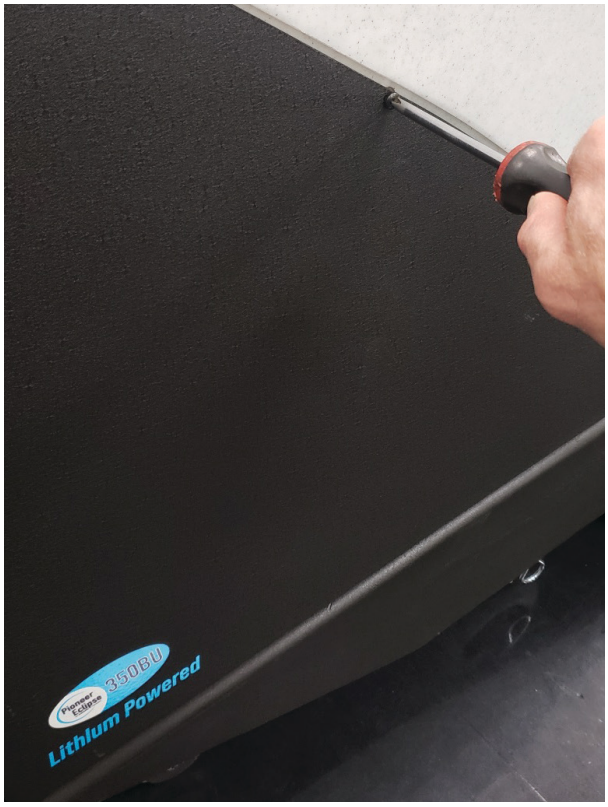

2. Connect the battery with the black cable connected to the black terminal and the red cable connected to the red terminal.

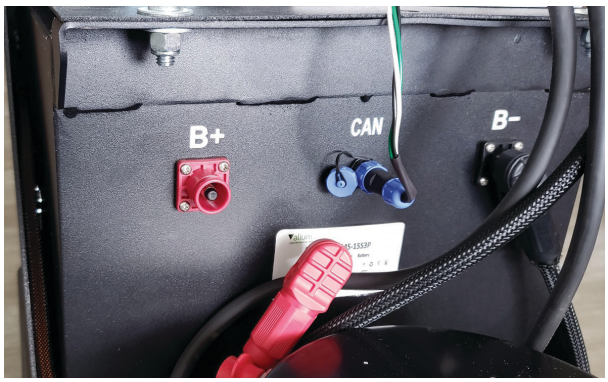

3. To disconnect the battery, depress button on side of black connector and remove from battery terminal. Repeat process for red connector.

Battery Recycling

The battery installed in the 350BU can be recycled. The battery is Lithium Iron Phosphate, (LFP). In North America, recycling options include:

www.batteryrecyclersofamerica.com

www.call2recycle.org

www.li-cycle.com

For other locations, contact your local recycling center.

Machine Components

Controls and Instruments

350BU

1. **Key Switch** - Turns the machine on/off.
2. **Handle Bail** - When the handle bail is engaged the pad will start turning.

   NOTE: *The machine needs to be moving when the pad is turning in order to keep from burning the floor.*
3. **Touch Screen Display** - The Touch Screen Display is the main dashboard and control panel for the burnisher. It displays the following:
4. **Pad Speed Control:**

   The Pad Speed is how the operator changes pad speed. The default pad speed (each time the burnisher is turned on) is set at 80% of maximum and can be changed in 10% increments by simply pushing the speed arrows up or down.
5. **Battery Economy & Burnishing Performance:**

   These indicators reflect the state of the battery drain (economy) based on the burnishing performance (indicated by amp draw in this case).

   Generally, high burnishing performance will be associated with lower battery economy and as burnishing performance goes down, battery economy rises.

   These are not areas that can be manipulated from the Controller.
6. **Hour Meter:**

   The hour meter records the number of hours the machine has been powered ON. The hour meter reading is used to mark recommended maintenance intervals.
7. **Battery Life Indicator:**

   Indicates the percent (%) of battery left on a given charge.

   A visual representation of battery life is indicated above by the dial.
8. **Error Codes:**

   If a error is detected, an error code number will appear in the bottom right of the display. See troubleshooting section for an explanation of error codes, causes and solutions.
9. **Additional Information:**

   Additional information can be accessed via the question mark icon on the display.

   Pressing the question mark will take you to Contact Information page.

Pressing the arrow button will take you to the Preferred Language page. You may select English, Spanish, or French. Select the preferred language.

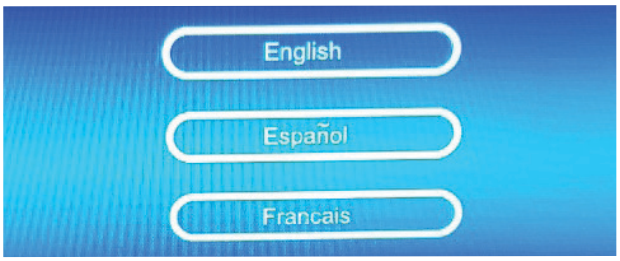

The next page provides a choice of Error Codes or Troubleshoot. Press either option to help understand and resolve their respective problems.

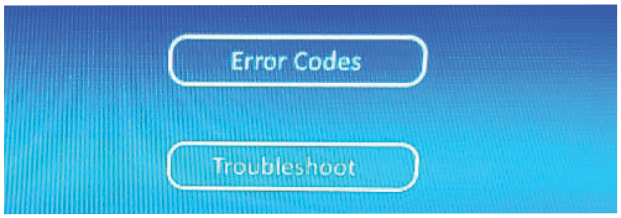

Error Codes list the codes that could be listed on the display and action required.

Troubleshoot lists potential machine problems and recommendations to correct the issues.

You can always return to the home screen by pushing the Home icon.

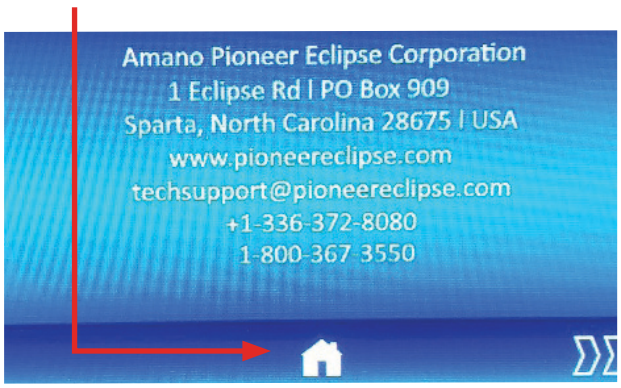

Over Current Protection

The burnish motor controller automatically reduces the motor speed if the motor current is above a preset limit. If the controller is unable to keep the motor current in a working range, or if there is an electrical short, a 100 amp circuit breaker will trip. To reset:

1. Remove the two screws that secure the battery cover.

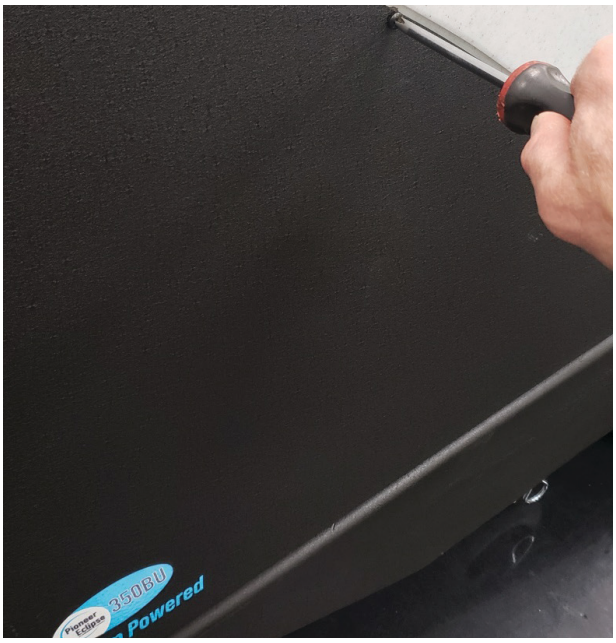

2. Locate the circuit breaker and push the reset button.

3. Lower the battery cover and secure with screws.

The controller is also protected by a fuse. It is located between the controller and battery charger. The fuse is rated for 3 amps and can be replaced if blown.

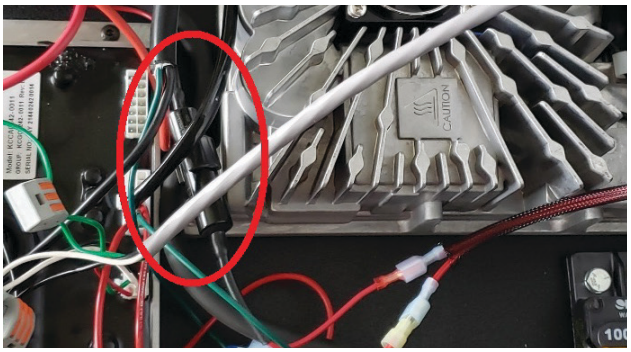

Onboard Battery Charger

To charge the batteries, push the machine to a flat, dry, well-ventilated area. Turn off the machine.

Unwrap the charging cord and plug into a wall socket. The battery charger will initialize and then soft start the charging cycle.

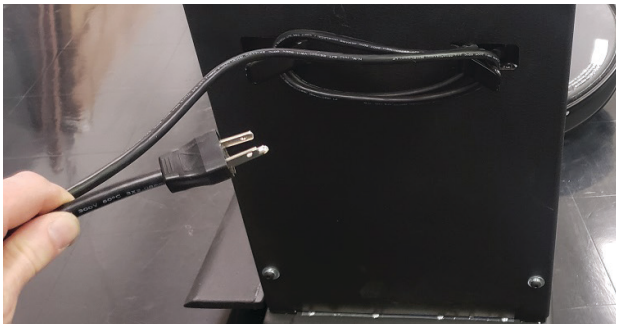

Battery Charger Controls

The battery charger is located under the battery cover. It displays colored LEDs and simple text to communicate status and faults.

LED Lights Description

- **Yellow (unblinking) = Charging normally**
- **Yellow (blinking) = Charging, power limited**
- **Green = Charge complete**
- **Red = Fault condition**

Stage 1: Pre-Test

1. This stage applies tests to the battery pack before charging the batteries. The charging process is terminated if unsuitable conditions are found. Stage duration (usually 10 seconds) depends on the condition of the battery pack.

2. On connection to both AC and DC, the display scrolls the word “Start”, then scrolls “LC bul”. The yellow charging LED illuminates, which indicates that the charging of the battery pack has started.

Note: When a battery pack is severely discharged (< 1.75 VPC), this stage can take several hours while the charger revives the battery pack.

Stage 2: Constant Current Charge (Bulk)

1. If the Pre-Test is successful, the charger enters the Bulk Stage. The charger is now operating at full power.

2. The display scrolls “bul” followed by the current, and the yellow LED stays illuminated.

Stage 3: Constant Voltage Charge (Absorption)

1. The charger now regulates voltage instead of current, holding the battery at the gassing state. The charger maintains a constant voltage as the charge current gradually decreases.

2. During this stage, the display scrolls “Abs” and the current, and the yellow LED stays illuminated.

Stage 4: Constant Current Charge (Finish)

1. The charger now regulates the current while the voltage rises, completing the main charge. This stage ends when the charge is replenished to 100% capacity.

2. The display scrolls “Fin” and the current. The yellow LED stays illuminated until the charge is complete.

3. At that point, display scrolls “Charge done”, the yellow LED turns off, and the green LED is illuminated.

Charging Notes

- During any part of the charging process, if AC power is disconnected and reconnected, the charger restarts -- quickly picking up from where it left off.

- If the charger finds an abnormal charge condition while charging, it will attempt to shut down and indicate the fault condition.

Batter Charger Fault Codes

Code	Description
01	Battery current is over setpoint (10% over target after limiting)
02	Under minimum current during LC Bulk stage
03	Under minimum current during Bulk stage
04	Under minimum current during Absorption stage
05	Under minimum current during Finish stage
06	Output current limited because hardware limitations
07	Battery voltage over maximum limit
08	Battery voltage under minimum limit
09	Battery voltage under abs minimum limit
0A	Start stage time over maximum limit
0B	LC Bulk stage time over maximum limit
0C	Bulk stage time over maximum limit
0D	Absorption stage time over maximum limit
0E	Finish stage time over maximum limit
0F	Charge cycle time over maximum limit
10	External command period over maximum limit
11	Primary response period over maximum limit
12	STM32 internal voltage reference out of range
13	External voltage reference out of range
14	15 volt regulator out of range
15	Sync rect FET thermister out of range
16	PFC thermister out of range
17	STM32 internal temperature sensor out of range
18	Battery thermister out of range
19	Sync rect FET temperature over operating limit
1A	Sync rect FET temperature over absolute limit
1B	PFC temperature over operating limit
1C	PFC temperature over absolute limit
1D	STM32 internal temperature over operating limit
1E	STM32 internal temperature over absolute limit
21	Low current Bulk stage dV/dt stall
22	Bulk stage dV/dt stall
23	Absorption dI/dt stall
24	Finish stage dV/dt stall
25	Invalid program parameter block (checksum)
26	Invalid algorithm (ID, version, checksum, # of cells)
27	Battery thermister failure
28	Output relay and/or synchronous relay control failure
29	Primary fault reported
2A	Battery polarity reversed
2B	EEPROM access fault
2C	Temperature sensing has failed

How the Machine Works

The Burnish components of the machine are:

- Burnish pad holder
- Burnish pad
- Dust Collection Bag

As the machine moves forward, the burnish pad shines the floor. Any excess debris or finish gets picked up by the pad and distributed into the dust collection bag via the dust collection system.

Pre-Operation Checklist

Before operating the machine:

- Inspect the burnishing pad and replace, if necessary. Refer to Installing/Changing Burnishing Pad
- Inspect the pad holder for cracks or damage! Replace if necessary. Refer to Maintenance.

  WARNING! *DAMAGED PAD HOLDER ROTATING AT HIGH SPEEDS MAY BE AN EXTREME HAZARD IF IT SHOULD DISINTEGRATE.*

- Check that the Dust Collection Bag is empty.
- Release caster breaks.

Operating the Machine

1. Complete pre-operation check.
2. Turn the Key to the ON position.
3. Adjust speed as needed on by pushing the up or down arrows on the Pad Speed Control on the Controller dashboard.
4. Squeeze the handle bail and the burnisher motor will start.
5. Lower the burnishing head to the floor while moving the machine forward slowly.

CAUTION! DO NOT allow burnish motor to contact the floor without moving the machine. If the machine remains unmoved, damage to the floor may occur.

CAUTION! DO NOT add weight to the burnisher head.

CAUTION! DO NOT lift up on the handle to add pressure while burnishing.

Stopping & Turning Off Machine

To stop the machine, release the handle bail to stop the rotation of pad. Turn off the key switch.

Operation on Inclines

CAUTION! *When the machine is traversing on an incline, up or down, move slowly.*

CAUTION! *Do not run burnish pad on an incline. The maximum rated climb and descent incline is 6°.*

Rok-Bak & Pad Change

1. Make sure the burnish switch and key switch are OFF.
2. Loosen the handle pivot knobs on each side of the bulkhead.
3. Pull the handle out until it stops.
4. Rotate the handle towards the front of the machine until it is vertical.

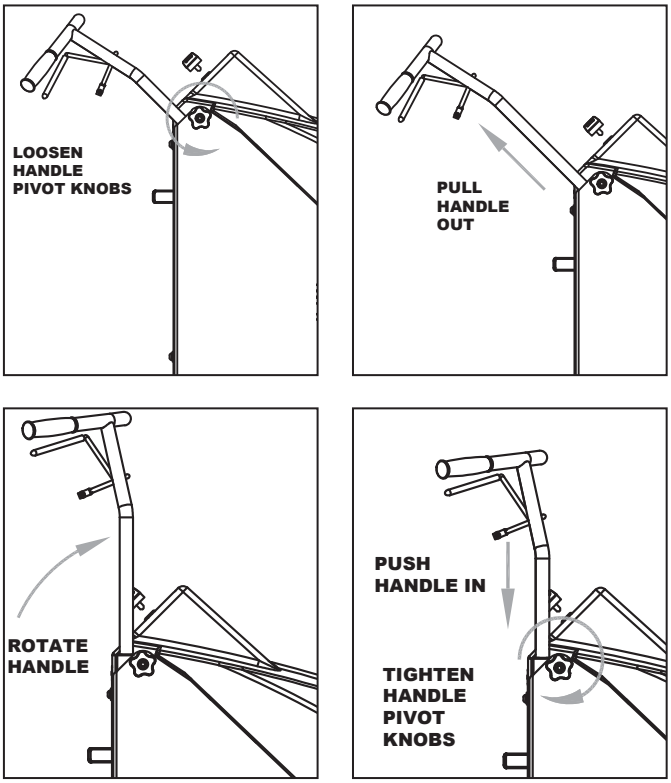

5. Push down on the handle until it stops.
6. Tighten the handle pivot knobs so that the handle cannot move or slide.
7. Lift on the front of the deck and gently rock the machine back until it rests on the handle grips.

8. Remove the center device by turning counter-clockwise and carefully remove the old pad from the Velcro material.

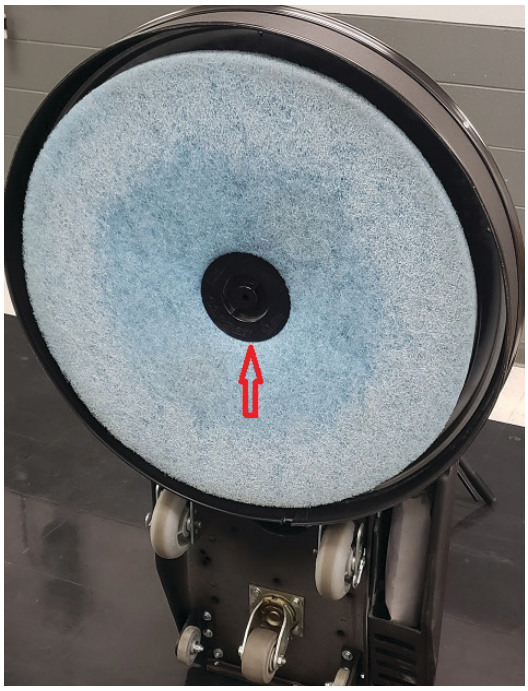

CAUTION! *CAREFULLY INSPECT THE PAD HOLDER FOR CRACKS OR DAMAGE! REPLACE IF NECESSARY.*

WARNING! *A DAMAGED PAD HOLDER ROTATING AT HIGH SPEEDS MAY BE AN EXTREME HAZARD IF IT SHOULD COME APART.*

9. Pull center from new pad, align pad on pad holder and secure with centering device by turning clockwise.
10. Press pad firmly onto pad holder face.
11. When lowering the machine down, do not drop it. Slowly lower the machine to the floor until the wheels are on the ground.

Empty & Replace Dust Bag

1. Remove the dust bag cover by lifting upward on the back of the cover.
2. Remove the dust bag by working the elastic over the lip of the rubber grommet and pulling toward the rear of the machine.
3. Empty bag by rubbing or gently tapping on sides, in a downward motion, to loosen soil trapped on sides of bag. For heavy soil, turn bag inside out to clean.
4. Check the dust tube for debris and clear if needed.
5. Reinstall dust bag by working the elastic band over the lip of the rubber grommet.
6. Stretch the dust bag towards rear of machine and orientate with the zipper facing downward.

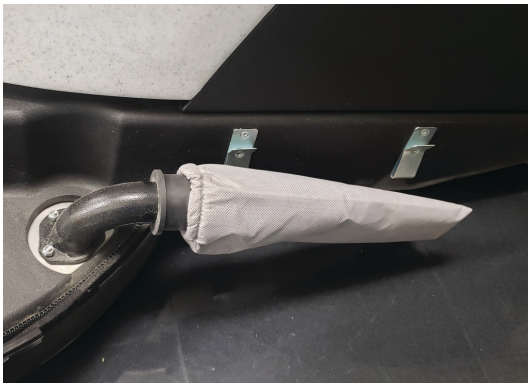

Wheel Adjustment

1. Raise the handle to the full-up position (about a 45° angle).
2. Rock the machine by lifting up on the front of the machine until it rests on the handle grips.
3. Remove the pin that retains each wheel and relocate to the desired wheel position.

NOTE: *To increase pad pressure (more aggressive) move wheels to rear of machine. To decrease pad pressure (less aggressive) move wheels toward the front of machine.*

Handle Adjustment

1. The height of the handle can be adjusted by raising or lowering the handle.
2. Loosen the handle pivot knobs by turning counter-clockwise.

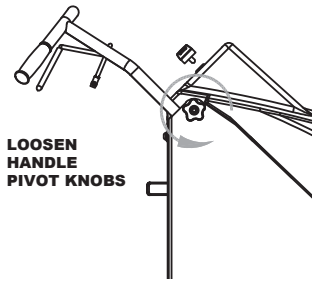

3. Move the handle in and out to the desired height

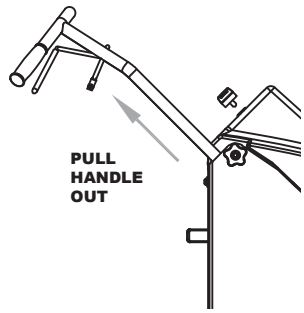

4. Tighten the handle pivot knobs.

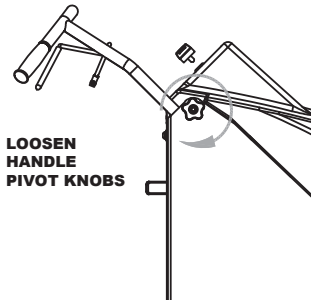

Post Operation Checklist

Turn the machine OFF and perform the following checks:

- Check for wire, string, or twine wrapped around the burnish pad.
- Check for frayed wires or damage.
- Empty the dust collection bag.
- Check dust skirt wear edge and replace as needed.
- Plug in on-board battery charger.

Maintenance

Scheduled Maintenance

Operation	Interval						
	Daily	Every 25 Hrs	Every 50 Hrs	Every 100 Hrs	Every 200 Hrs	Every 500 Hrs	Every 1000 Hrs
Empty/clean dust bag	●						
Inspect pad holder	●						
Check wiring harness for fray or cut		●					
Check for loose/missing nuts or screws	●						
Tighten nuts and screws				●			
Inspect drive belt					●		
Check / Replace dust skirt edging	●						
Replace drive belt	As Required						

These items must be performed with the proper tools and training. Contact a Amano Pioneer Eclipse Factory Certified Technician unless you have the proper equipment and mechanical proficiency.

Body & Battery Cover

The body may be cleaned with a damp cloth to remove dust and scuff marks. More stubborn scuff marks on the tank exterior can be removed with a vinyl cleaner.

CAUTION!: *Do not use solvents or degreasers to clean the machine.*

Controller Errors

Error Code	Cause	Action
18, 34,35, 41-45, 55, 77, 88, 97-99, 153	**Motor Controller Problem**	Key machine off, then key back on. If problem persists contact Pioneer Eclipse Authorized Dealer
38	**Startup Initialization Failed**	Key machine off. Check all electrical connections. If problem persists contact Pioneer Eclipse Authorized Dealer
50, 51, 85	**Solenoid Problem**	Check Solenoid, replace if necessary. If problem persists contact Pioneer Eclipse Authorized Dealer
66	**Motor Current to high**	Check Motor. Check machine setup. If problem persists contact Pioneer Eclipse Authorized Dealer
33	**Low Battery**	Charge Battery
59, 60, 113	**Communication to LCD problem**	Check connections to LCD. If problem persists contact Pioneer Eclipse Authorized Dealer
113, 115, 117, 119, 121, 123	**Battery Warning**	Approaching Battery Fault. Check Battery. If problem persists contact Pioneer Eclipse Authorized Dealer
114, 116, 118, 120, 122, 124, 125	**Battery Fault**	Stop using machine. Contact Pioneer Eclipse Authorized Dealer
136	**Burnish switch engaged at power up**	Release bail handle, check burnish switch for proper operation.
149	**Battery shut down**	Disconnect battery for 1 minute and reconnect. Contact Pioneer Eclipse Authorized Dealer

Machine Troubleshooting

Problem	Possible Cause	Action
Machine will not turn on	Breaker Tripped	Reset Breaker
	Incorrect Battery Connection	Check Battery Connection
	On-Board charger plugged in	Unplug charging cord
	Keyswitch Failure	Check Key Switch operation and connection
	Failed Fuse	Check fuse, replace if necessary
Burnish Motor will not start	Pad Change Safety switch	Check safety switch and connections
	Bail Switch	Check bail switch and connections
	Bail Switch engaged at key on	Release bail and then reengage bail
	Burnish Motor Connection	check motor connections
Machine exhibits poor burnish performance	Pad Dirty	Remove debris or string/twine from pad; clean pad; replace pad
	Incorrect Pad	Use more aggressive burnish pad
	Pad Worn Down	Replace Pad
	Pad speed too slow	Increase pad speed
	Too much pad pressure	Check machine setup
Machine exhibits very aggressive burnish performance	Incorrect Pad	Use less aggressive burnish pad
	Wheels are adjusted to far back	Move both wheels forward in the wheel bracket
	Pad speed too fast	Reduce Pad Speed, check machine setup
Dust collection not working properly	Dust collection bad, not collecting dust	Empty dust bag
		Check the dust tube for obstruction
	Skirt not sealing to the floor	Skirt bent or damaged. Replace if necessary
		Adjust the skirt to fit tightly against the seal, but still able to move freely
		Check wear edge on bottom of the skirt and replace if necessary
Smell of burned rubber	Belt out of adjustment	Check automatic tensioner
Machine Vibrates	Loose Fastener	Check tensioner, spindle, and pad holder fasteners. Tighten any fasteners that may be loose.
	Pad is not centered on the pad holder	Remove pad and re-center on padholder. Replace pad
	Padholder out of balance	Remove pad holder and clean both sides. Check for cracks or tears. Replace if necessary
Machine pulls to one side	Bent wheel bracket	Replace wheel bracket
	Bad wheel	Replace wheel
	Wheels are adjusted to far back	Move both wheels forward in the wheel bracket

Machine Specifications

Feature	Imperial	Metric
Burnish Width	28"	71 cm
Productivity Rate	36,400 sqft/hr	3382 sqm/hr
Voltage	48V	48V
Battery Type	1 x 48V 177Ah; 8.5kWh	2 x 48V 177Ah; 8.5kWh
Operating Time	2 hrs	2 hrs
Onboard Battery Charger	Standard	Standard
Circuit Protection	100 Amp Circuit Breaker	100 Amp Circuit Breaker
Traction Drive	Not Applicable	Not Applicable
Burnish Motor (Continuous)	48V, 2,000 rpm, 5 HP	48V, 2,000 rpm, 3,75 kW
Pad Speed (Maximum)	1,550 rpm	1,550 rpm
Pad Speed (Minimum)	930 rpm	930 rpm
Adjustable Pad Pressure	40-75 lbs	18-34 kg
Pad Driver	Repairable, flex-center, rigid outer	Repairable, flex-center, rigid outer
Pad Counterbalance	Steady machine pivot	Steady machine pivot
Dust Collection	Standard	Standard
Pad Change	Machine rock back	Machine rock back
Machine Pivot Point	Center	Center
Sound Level (dBA)	< 70 dBA	< 70dBA
Vibration Level (m/s2)	< 2.5 mm/sec2	< 2.5 mm/sec2
Frame	Permanent mold cast aluminum	Permanent mold cast aluminum
Cover	1/4" Polyethylene	6 mm Polyethylene
Wheels	6" non-marking with sealed ball bearing	15 cm non-marking with sealed ball bearing
Dimensions		
Weight	417 lbs	189 kg
Length	67"	170 cm
Deck Width	31.6"	80 cm
Height	42"	107 cm

PE350BU
Battery Burnisher
Parts Manual

Notes:

Pioneer Eclipse
An AMANO Company

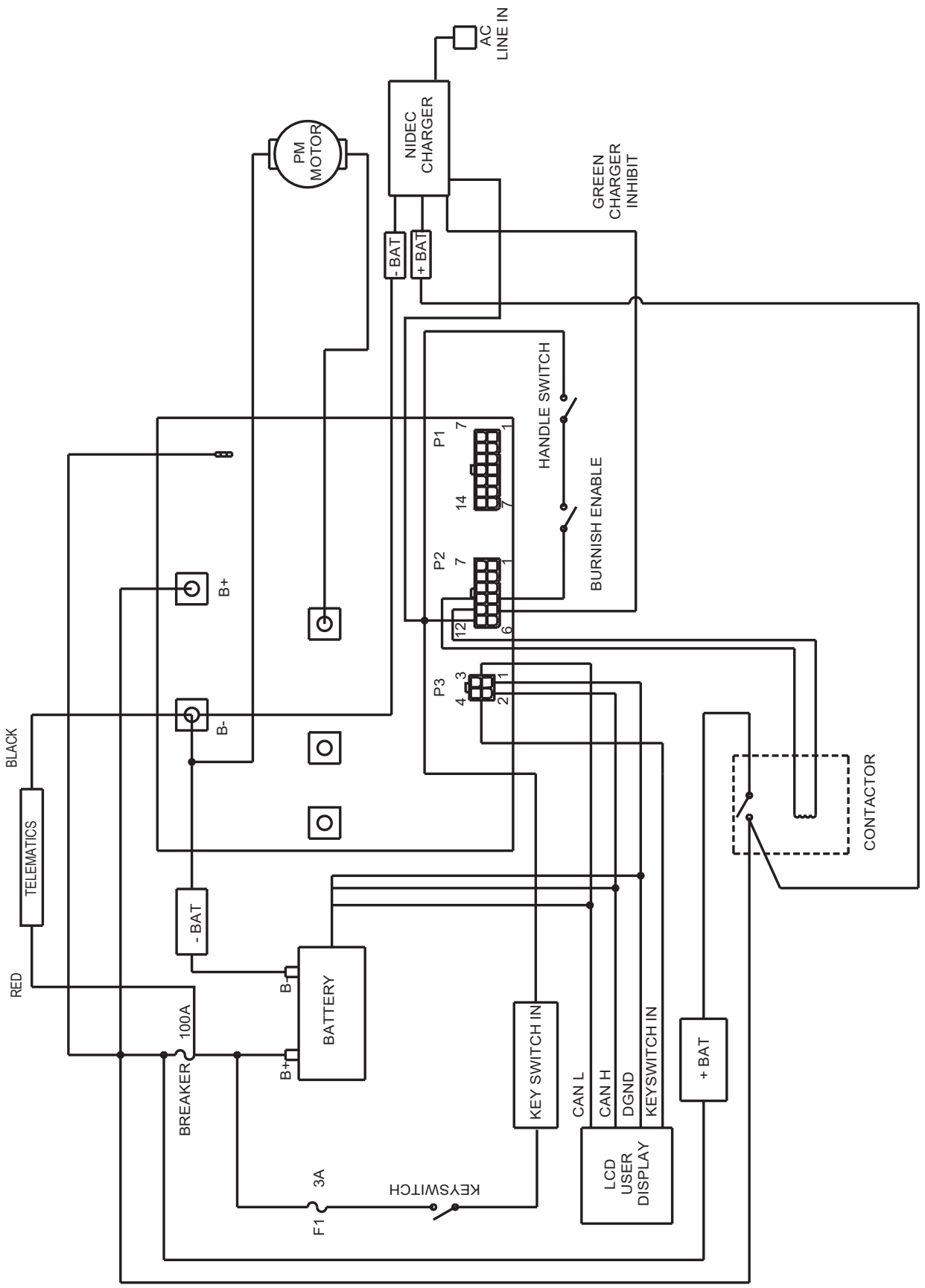

10/30/2025

RF090700

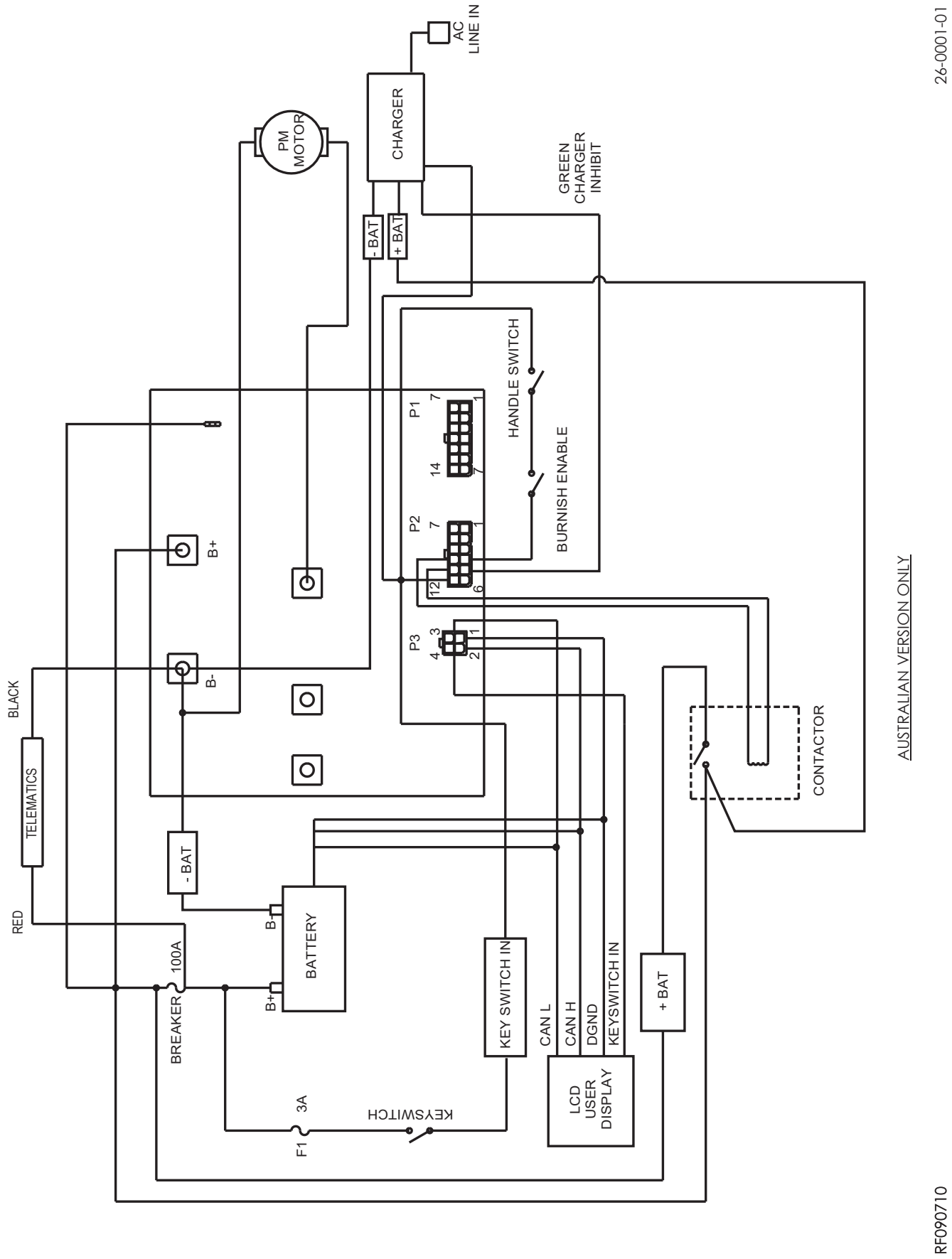
AC
LINE IN
CHARGER
PM
MOTOR
GREEN
CHARGER
INHIBIT
- BAT
+ BAT
HANDLE SWITCH
BURNISH ENABLE
P1
P2
P3
B+
B-
BLACK
TELEMATICS
RED
- BAT
BATTERY
B-
B+
100A
BREAKER
3A
F1
KEYSWITCH
KEY SWITCH IN
CAN L
CAN H
DGND
KEYSWITCH IN
LCD
USER
DISPLAY
+ BAT
CONTACTOR
AUSTRALIAN VERSION ONLY
26-0001-01
RF090710

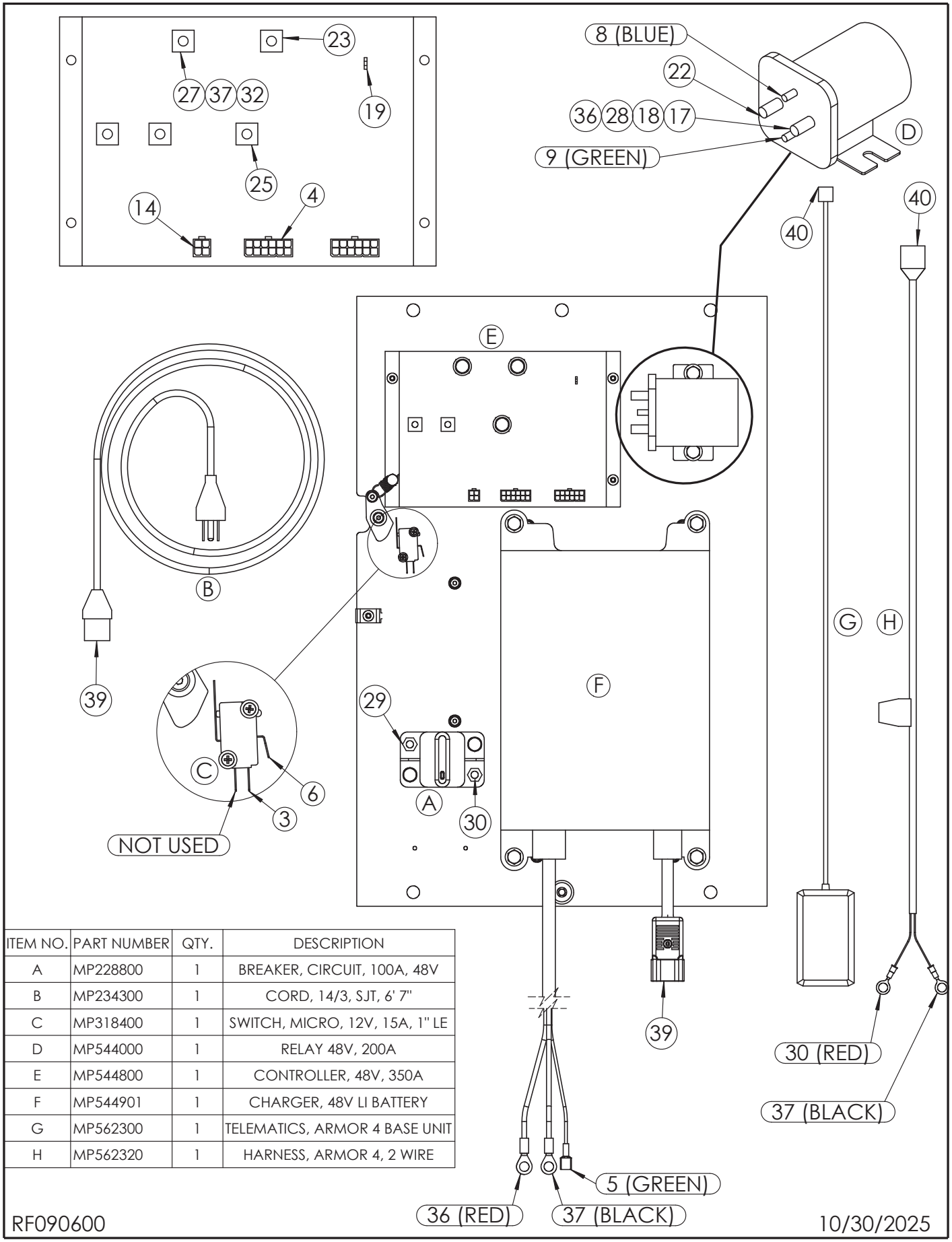

ITEM NO.	PART NUMBER	QTY.	DESCRIPTION
A	MP228800	1	BREAKER, CIRCUIT, 100A, 48V
B	MP234300	1	CORD, 14/3, SJT, 6' 7"
C	MP318400	1	SWITCH, MICRO, 12V, 15A, 1" LE
D	MP544000	1	RELAY 48V, 200A
E	MP544800	1	CONTROLLER, 48V, 350A
F	MP544901	1	CHARGER, 48V LI BATTERY
G	MP562300	1	TELEMATICS, ARMOR 4 BASE UNIT
H	MP562320	1	HARNESS, ARMOR 4, 2 WIRE

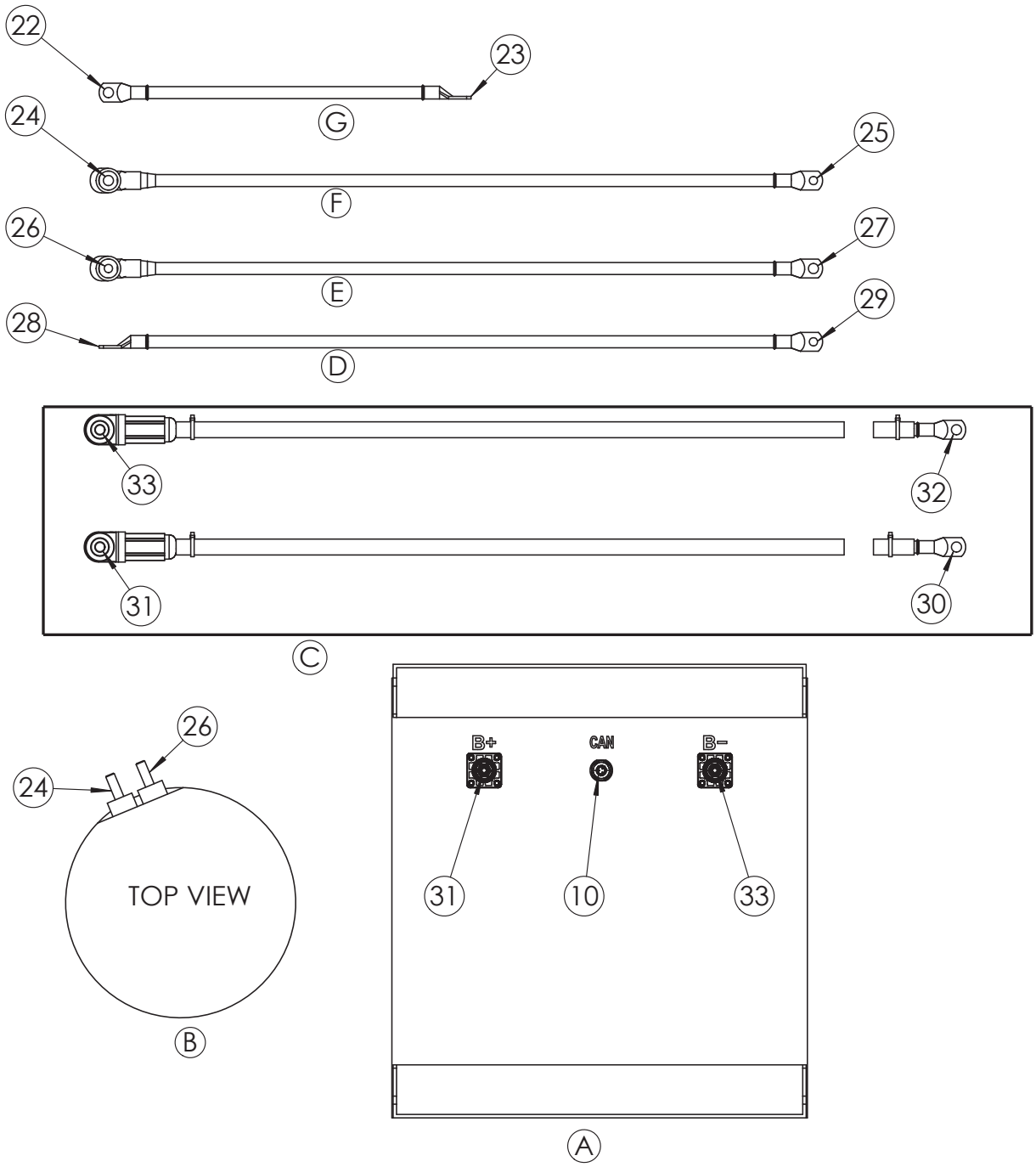

ITEM NO.	QTY.	PART NUMBER	DESCRIPTION
A	1	MP543900	BATTERY, 48V LI, ALIUM
B	1	MP537100	MOTOR, 48VDC, 5HP, 2000 RPM
C	1	MP549810	CABLES, BATTERY, 350BU28LI
D	1	MP54904	CABLE, 2 AWG, 1/4 X 5/16 X 16.8
E	1	MP549803	CABLE, NEG, 2 AWG, 1/4 X 5/16
F	1	MP549802	CABLE, POS. 2 AWG, 1/4 X 5/16
G	1	MP549801	CABLE, 2 AWG, 1/4 X 5/16 X 12

RF090600

10/30/2025

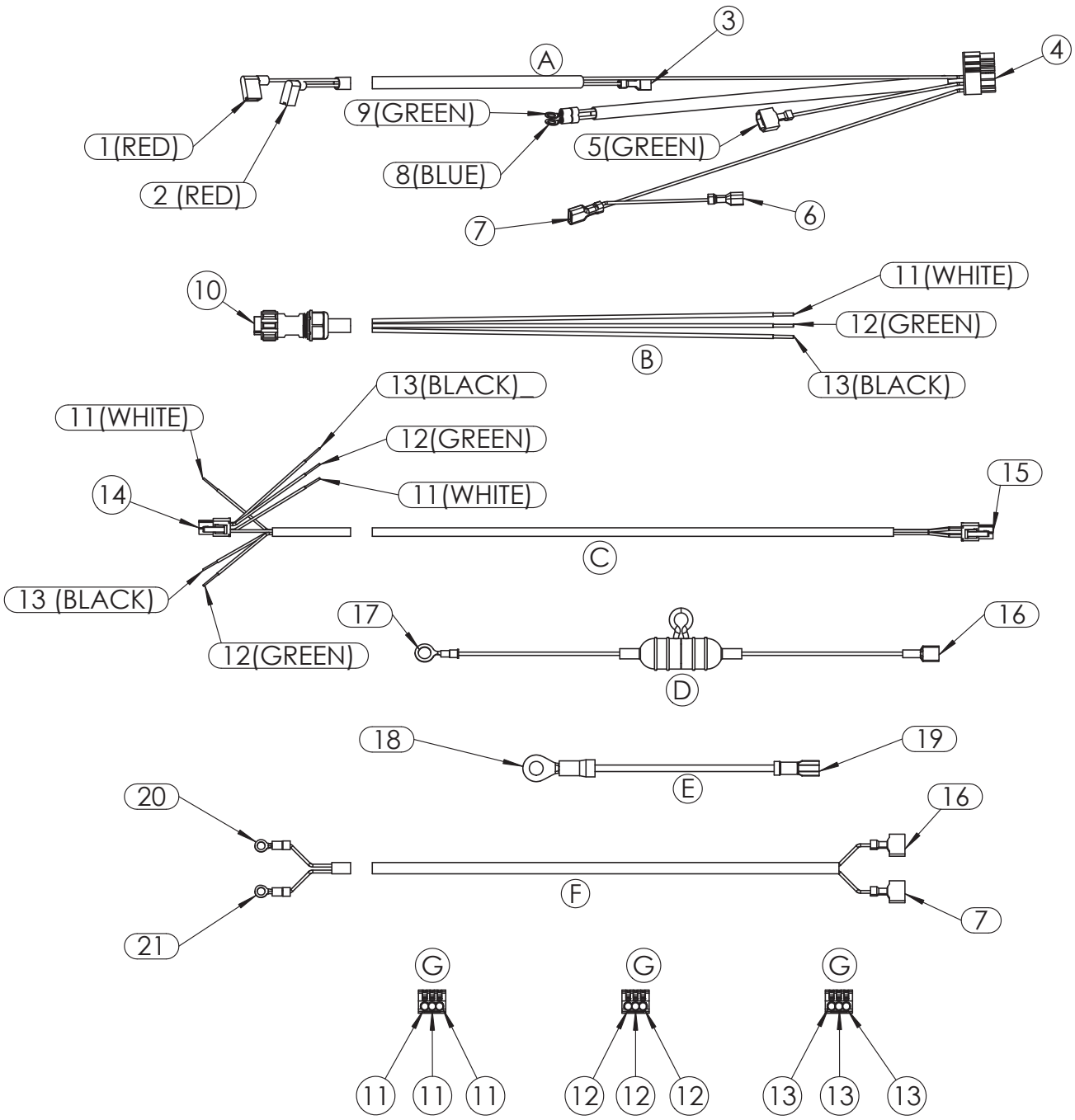

ITEM NO.	QTY.	PART NUMBER	DESCRIPTION
A	1	MP551800	HARNESS 350BU
B	1	MP551200	CABLE, CAN-BUS, 7 PIN
C	1	MP551700	HARNESS, 350BU, LCD TO CONTROL
D	1	MP551900	CABLE, FUSE TO KEY SWITCH
E	1	MP552100	CABLE, B+ TO CONTROL
F	1	MP552000	CABLE, 350BU POWER
G	3	NB083700	222-413-CONNECTOR 3-CONDUCTOR

RF090600

10/30/2025

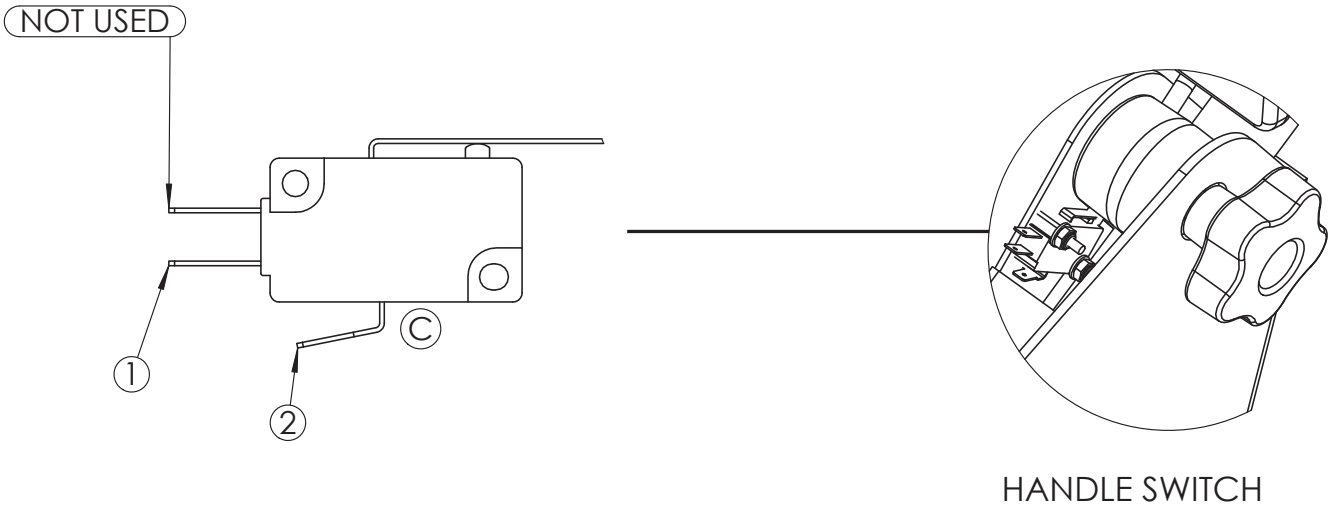

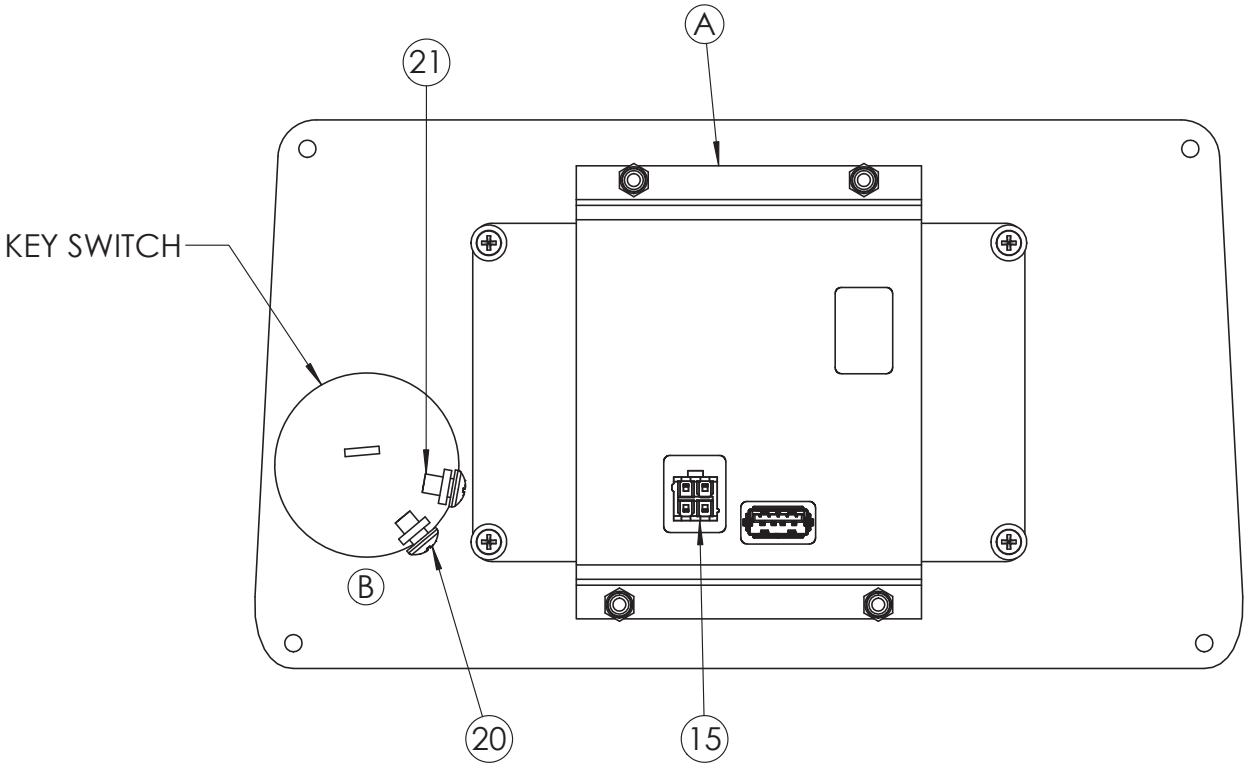

ITEM NO.	PART NUMBER	DESCRIPTION	QTY.
A	MP544101	350BU DISPLAY	1
B	MP544200	ASSY, KEY SWITCH	1
C	MP318400	SWITCH, MICRO, 12V, 15A, 1" LE	1

RF090600

10/30/2025

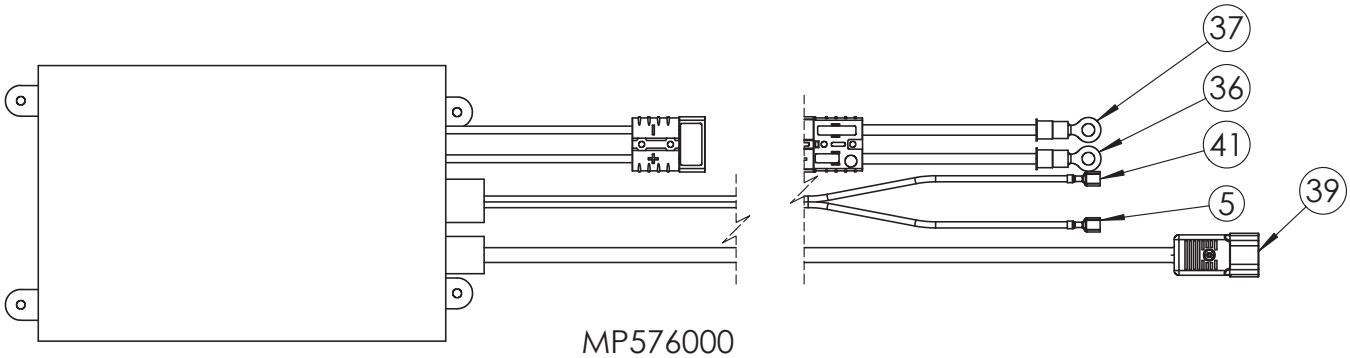

MP576000
AUSTRALIAN CHARGER

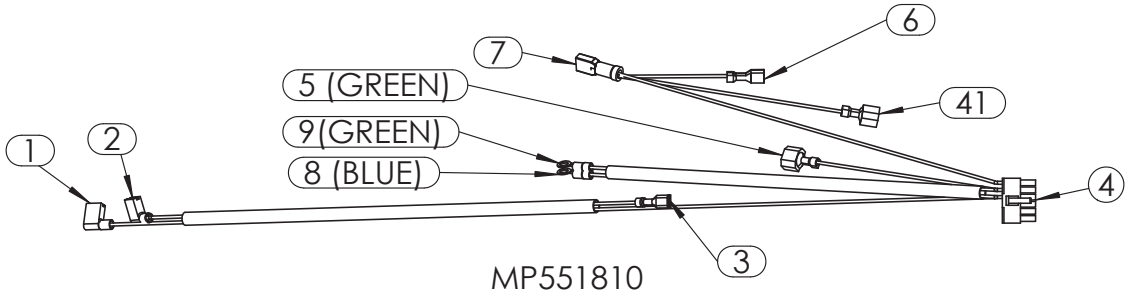

MP551810
(AU ONLY)

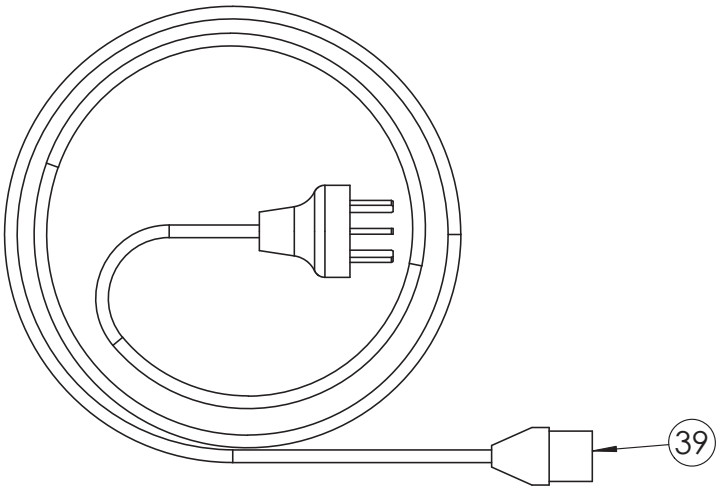

MP411400
(AU ONLY)

RF090600 10/30/2025

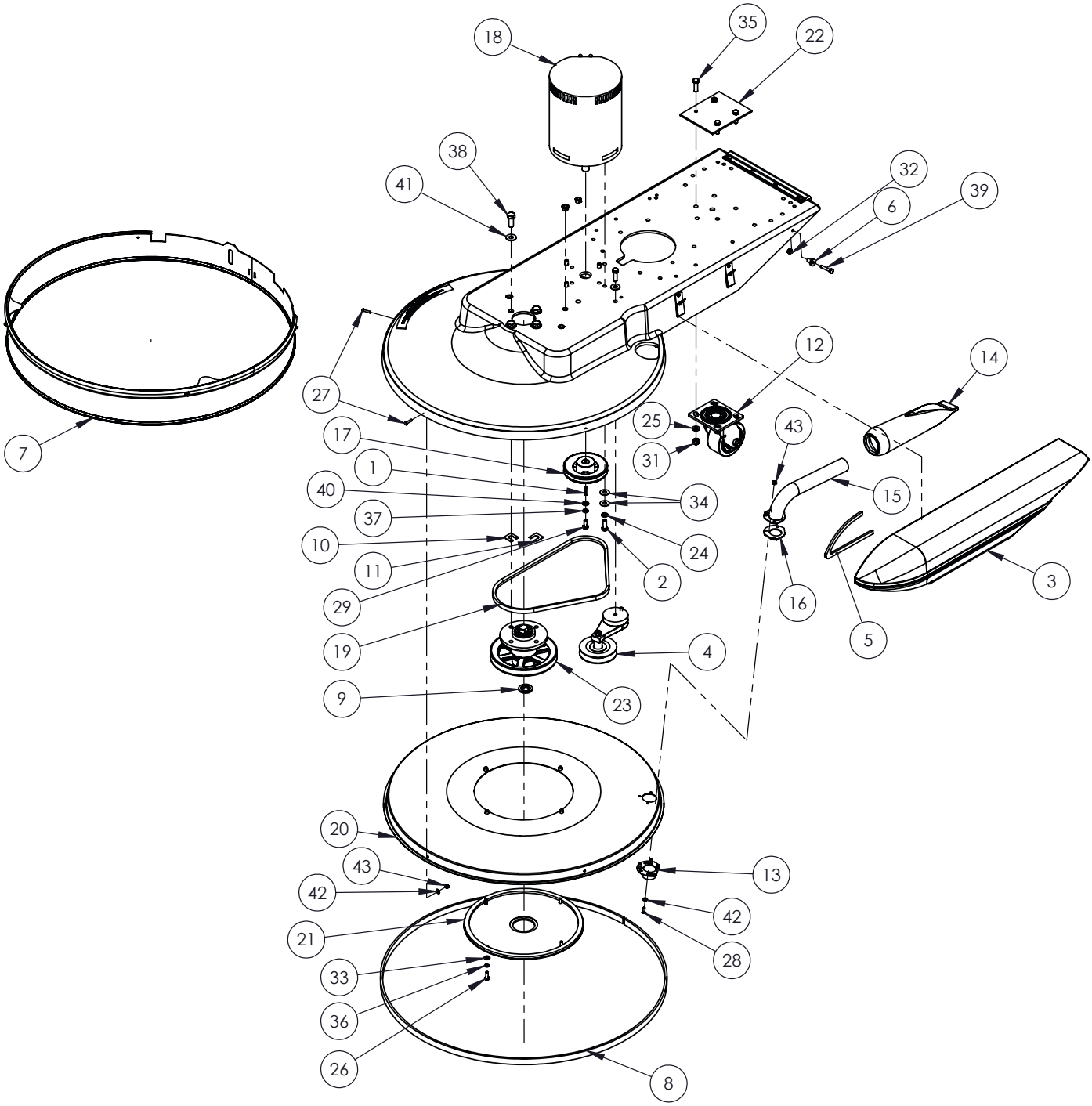

RF086200 4/1/2024

ITEM NO.	QTY.	PART NUMBER	DESCRIPTION
1	1	915044	KEY 3/16 X 3/16 X 1
2	4	962288	BOLT, HEX, 3/8-16 X 1.00, ZN
3	1	MP067400	COVER, BAG, VACUUM
4	1	MP071800	TENSIONER, BELT, W/4" PULLEY
5	1	MP075200_B	FOAM, SKINNED,1/2"X 1/4 X 38"
6	1	MP079800	STUD,SUPPORT, COVER, BAG, DUST
7	1	MP139401	SKIRT, STEEL, 28", ASM.,PP
8	97.04	MP139600	FELT, POLYESTER, 28 OZ, BLK
9	1	MP195300	SPACER, BEARING, RIGHT
10	1	MP197000	SHIM, CAMBER, 1/16"
11	1	MP197100	SHIM, CAMBER, 1/32"
12	1	MP411700	CASTER, 4", SWIVEL, 400 LB CAP.
13	1	MP467600	SCOOP, VACUUM, WELDMENT
14	1	MP469300	BAG, DUST, 12"
15	1	MP469500	TUBE, DUST, 90 DEG, WLDMT
16	1	MP496500	GASKET, DUST TUBE
17	1	MP537000	PULLEY, AK49, 4.75OD W/ 3/4
18	1	MP537100	MOTOR, 48VDC, 5HP, 2000 RPM
19	1	MP537800	BELT, AX-39
20	1	MP550600	ASSY., PAN, 28" VAC
21	1	MP550700	COVER, 350BU SPINDLE
22	1	MP555801	PLATE, CASTER MOUNT, TAPPED, PP
23	1	MP7235	ASSY, SPINDLE, 7.25" PULLEY
24	4	MX1075	WASHER, LOCK, 3/8
25	4	MX1080	WASHER, FLAT, 3/8"
26	4	NB019100	BOLT, HEX, 1/4-20 X 3/4 ZN
27	5	NB033300	SCREW, BH, #10-24 X 7/8
28	3	NB049200	SCREW, BH, #10-24 X 5/8, SS
29	1	NB085400	BOLT,HEX, 5/16-24x3/4
30	4	NB086500	PLUG, HOLE, 9/16 ID
31	4	NB3267	NUT, NYLOCK, 3/8-16
32	1	NB3275	NUT, NYLOK, 1/4-20
33	4	NB3350	WASHER, FLAT, SAE, 1/4", ZN
34	9	NB3450	WASHER, FLAT, USS, 3/8
35	5	NB6044	BOLT,HEX,3/8-16X1 1/4,ZN
36	4	NB6110	WASHER, LOCK, 1/4
37	1	NB6111	WASHER, LOCK, 5/16
38	4	NB6864	BOLT, HEX, 1/2-13 X 1 1/4, ZN
39	1	NB9000	BOLT, HEX, 1/4-20 X 1 1/2, ZN
40	1	NB9267	WASHER, FLAT, 5/16", ZN
41	4	NB9269	WASHER, FLAT, USS, 7/16"
42	8	NB9645	WASHER, FLAT, SAE, #10
43	9	NB9735	NUT, NYLOK, #10-24

Cover Assembly

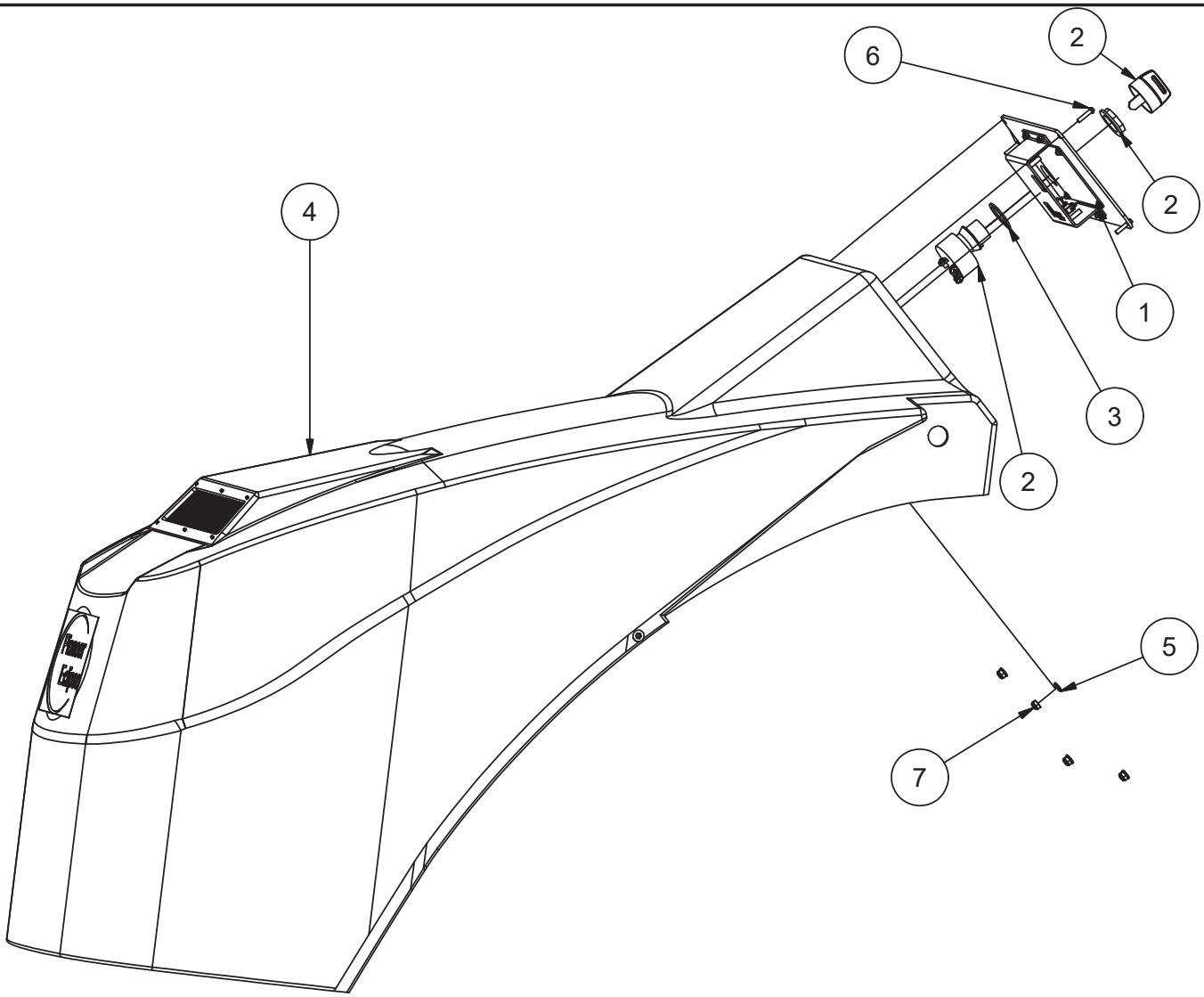

Parts List			
ITEM	QTY	PART NUMBER	DESCRIPTION
1	1	MP544101	ASSY., DISPLAY, 350BU
2	1	MP544200	ASSY, KEY SWITCH
3	1	MP546800	SPACER, 350BU SWITCH
4	1	MP548900	COVER, 350BU ASSY
5	4	NB007100	WASHER, FLAT, #6
6	4	NB9200	SCREW, MACHINE, ROUND HD, 6-32 X 5/8
7	4	NB020800	NUT, LOCK, NYLON, 6-32

RF086100 10/14/22

350BU FRAME ASSEMBLY

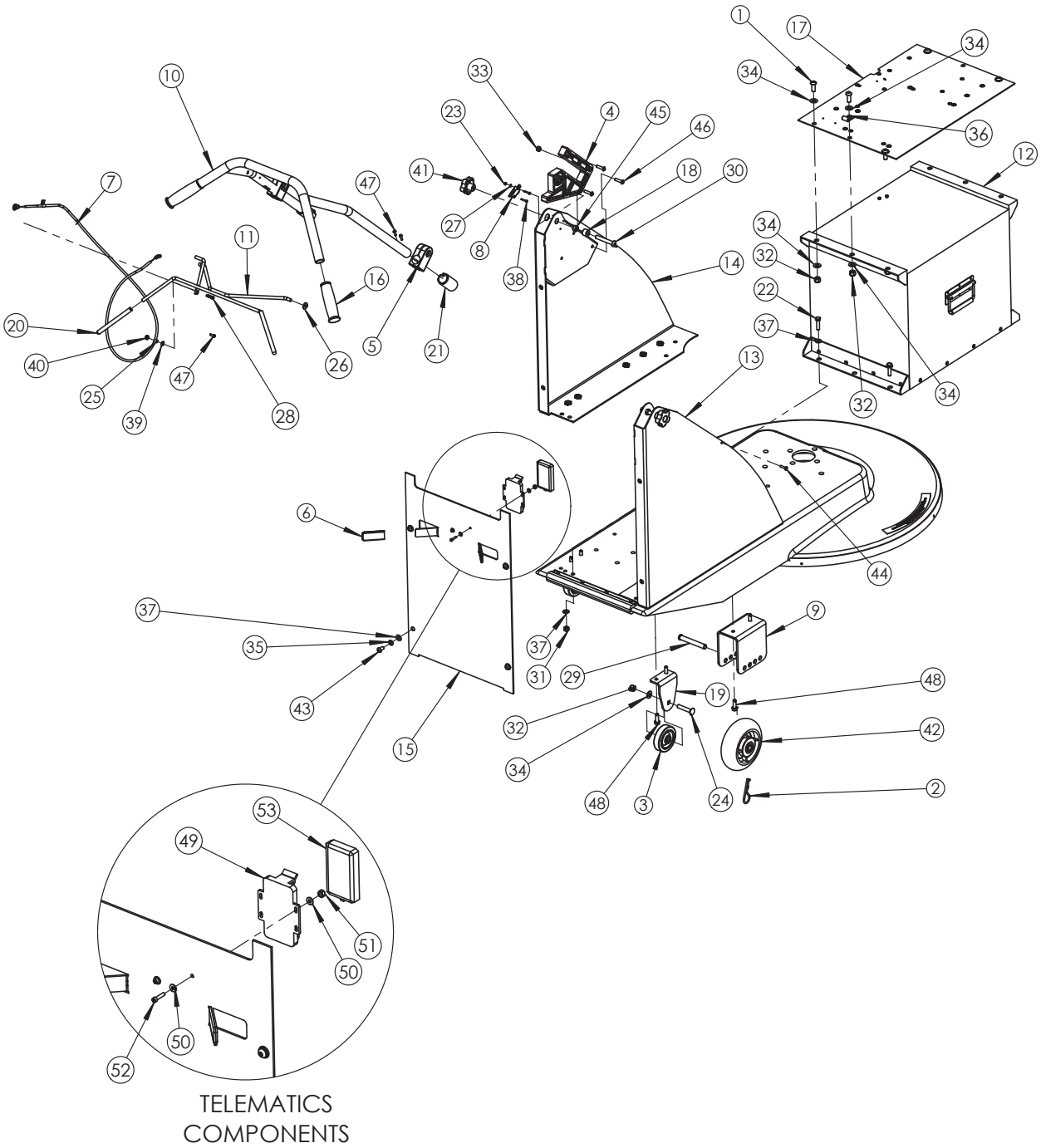

RF086500 6/17/2025

ITEM NO.	QTY.	PART NUMBER	DESCRIPTION
1	5	962870	SCREW, BH, 3/8-16 X 1, ZN
2	2	LX2105	CLIP, HITCH PIN
3	2	MP038700	WHEEL, 3",PERFORMA, FLAT TREAD
4	2	MP039300	PLATE, LOCK, HANDLE
5	2	MP042100	BLOCK, SLIDE, PIVOT, HANDLE
6	2	MP077425	COVER, TENSION SPRING, 2.5"
7	1	MP106500	CABLE, THROTTLE CONTROL
8	1	MP318400	SWITCH, MICRO, 12V, 15A, 1" LE
9	2	MP371501	BRACKET, WHEEL, 5" X 2"
10	1	MP5410XX	WLDMT, LI BUFFER HANDLE
11	1	MP5427XX	WLDMT, LI BUFFER BAIL
12	1	MP543900	BATTERY, 48V, ALIUM
13	1	MP545802	WLDMT, SIDE PANEL R, PP
14	1	MP546102	WLDMT, SIDE PANEL, L, PP
15	1	MP546412	COVER, REAR, 350BU, PP
16	2	MP546600	GRIP, 1" BAR, SAT3 SERIES
17	1	MP546901	MOUNT, ELECTRONICS, ASSY, PP
18	2	MP547200	AXLE, COVER
19	2	MP549700	BRACKET, WHEEL, FLAT, RAW
20	2	MP553700	GRIP, 5/16 X 5
21	2	MP553900	BUSHING, HANDLE
22	4	NB001800	BOLT, HEX, 5/16-18 X 1 1/4, ZN
23	4	NB007000	NUT, NYLOCK, #4-40
24	2	NB010100	BOLT, CARRIAGE, 3/8-16 X 2
25	1	NB028300	BUSHING, CABLE, BAIL
26	2	NB031500	WASHER, 5/16", BONDED NEOPRENE
27	4	NB048300	WASHER, FLAT, #4
28	1	NB049100	SCREW, BH, #10-24 X 7/8, SS
29	2	NB053400	PIN, CLEVIS, 1/2 X 3 1/2, CZ
30	2	NB073100	SCREW, BH, 3/8-16 X 2 1/2, SS
31	4	NB3265	NUT, NYLOCK, 5/16"-18
32	7	NB3267	NUT, NYLOCK, 3/8-16
33	7	NB3275	NUT, NYLOK, 1/4-20
34	12	NB3450	WASHER, FLAT, SAE, 3/8, ZN
35	4	NB6111	WASHER, LOCK, 5/16
36	1	NB8125	CLAMP, 1/4" ID, RETAINER
37	12	NB9267	WASHER, FLAT, 5/16", ZN
38	2	NB9625	SCREW, PAN, PH, #4-40 X 3/4, ZN
39	1	NB9645	WASHER, FLAT, SAE, #10
40	1	NB9735	WASHER, FLAT, #10, ZN
41	2	RV005100	KNOB, HANDLE
42	2	RV009600	WHEEL, PERFORMA, 6" GREY
43	4	87701A	SCREW, BH, 5/16-18 X 5/8
44	2	85383A	SCREW,PAN, PH, #10-32 X 3/4, ZN
45	2	NB046200	NUT, HEX, 3/8-16, ZN, UNC
46	6	NB9308	SCREW, BH, 1/4-20 X 1
47	5	NB4382	SCREW, DRILL-KWIK, #8 X 1/4
48	8	NB087800	SCREW,FLG,SELFTAP,5/16-18X1,ZN
49	1	MP562310	BRACKET, TELEMATICS, ARMOR 4
50	4	NB9720	WASHER, FLAT, #8, ZN
51	2	NB9725	NUT, NYLOK, #8-32, ZN
52	2	NB084200	SCREW, SHC, 8-32 X 3/4
53	1	MP562300	TELEMATICS, ARMOR 4 BASE UNIT

RF086500 6/17/2025

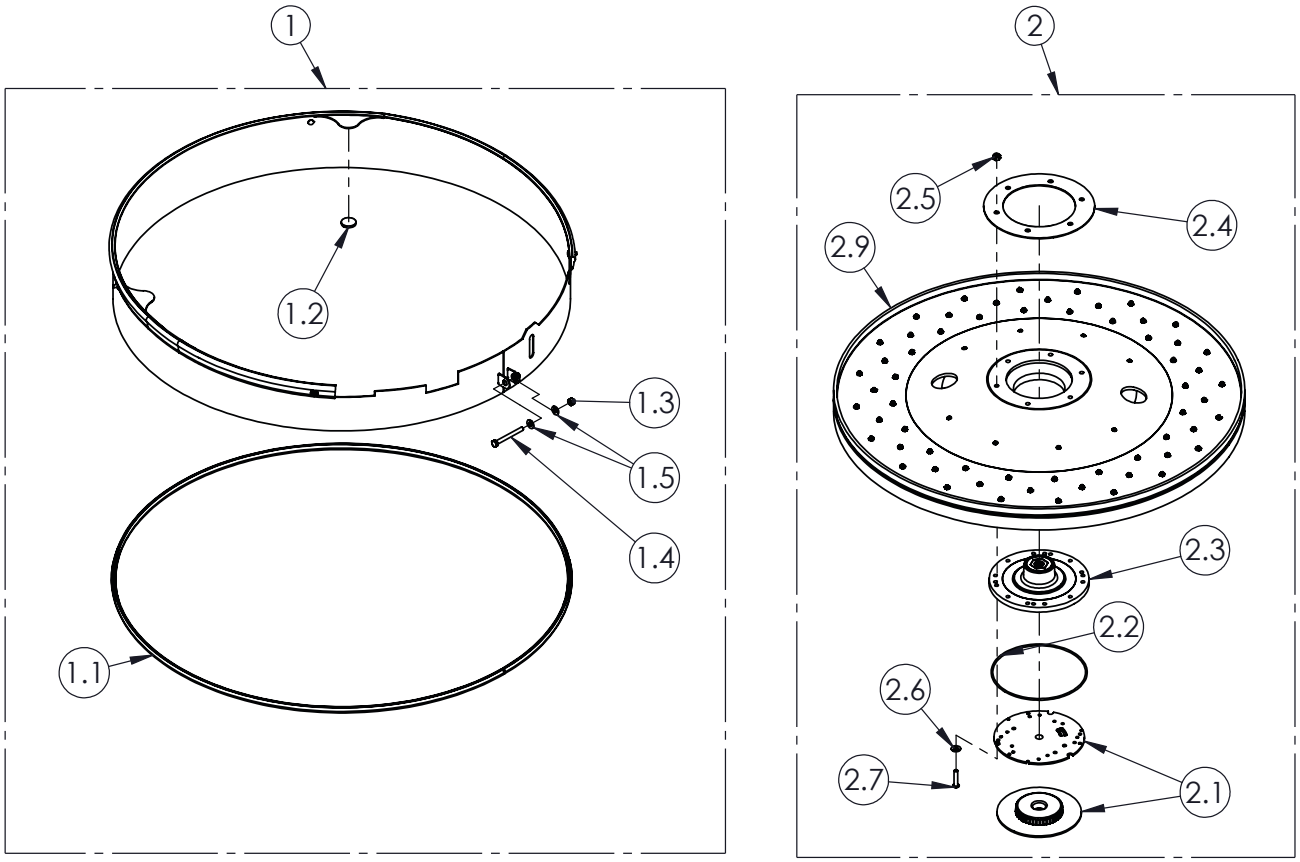

ITEM NO.	QTY.	PART NUMBER	DESCRIPTION
1.1	97.64	MP139800	EDGING, WEAR, SKIRT
1.2	2	MP140000	FELT, DOT
1.3	1	MX1045	NUT, HEX, 1/4-20, ZN, UNC
1.4	1	NB050600	BOLT,HEX,1/4-20 X 2 1/2,ZN
1.5	2	NB3350	WASHER, FLAT, SAE, 1/4", ZN

SKIRT
(1) MP139401

ITEM NO.	QTY.	PART NUMBER	DESCRIPTION
2.1	1	MP012700	RETAINER, PAD, CENTER-LOK II
2.2	1	MP066300	RING, SPACER, CENTER LOK II
2.3	1	MP195800	INSERT, 3/4-10, FLEXIDISC
2.4	1	MP196300	RING, STRESS RELIEF,
2.5	6	NB3275	NUT, NYLOK, 1/4-20
2.6	6	NB3350	WASHER, FLAT, SAE, 1/4", ZN
2.7	6	NB9319	SCREW, BH, 1/4-20 X 1-1/4, BO
2.8	1	PD3LBB28_A	PAD, 28" BLUE BLEND
2.9	1	SA004000	PADHOLDER, 28", W/STUDS ONLY

28" PAD HOLDER
(2) MP032500

RF086300 04/01/2024

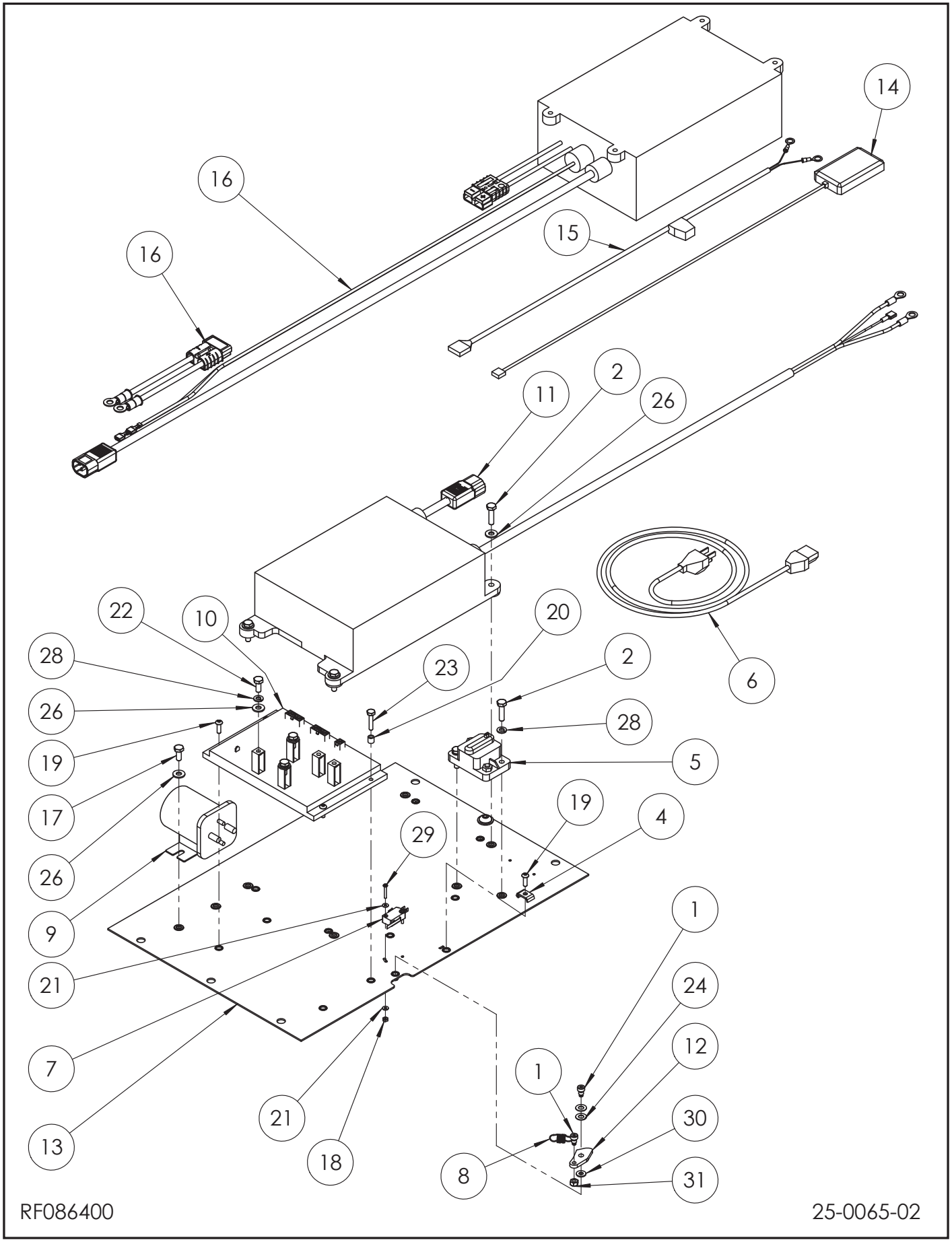
14
16
16
15
11
2
26
22
10
20
28
23
2
26
28
19
5
17
19
4
29
26
9
1
21
24
7
12
1
21
30
13
18
8
31
RF086400
25-0065-02

ITEM NO.	QTY.	PART NUMBER	DESCRIPTION
1	2	80018A	SCREW, SHLDR, 1/4X1/4, #10-24
2	6	85700A	BOLT, HEX, 1/4-20, ZN
3	1	962870	SCREW, BH, 3/8-16 X 1, ZN
4	1	MP098700	CLAMP, CABLE
5	1	MP228800	BREAKER, CIRCUIT, 100A, 48V
6	1	MP234300	CORD, 14/3, SJT, 6' 7"
7	1	MP318400	SWITCH, MICRO, 12V, 15A, 1" LE
8	1	MP452300	SPRING, EXT., .44OD X 1.13L
9	1	MP544000	RELAY 48V, 200A
10	1	MP544800	CONTROLLER, 48V, 350A
11	1	MP544901	CHARGER, 48V LI BATTERY
12	1	MP546500	PLATE, SWITCH ACTIVATION, RAW
13	1	MP546901	MOUNT, ELECTRONICS, ASSY, PP
14	1	MP562300	TELEMATICS, ARMOR 4 BASE UNIT
15	1	MP562320	HARNESS, ARMOR 4, 2 WIRE
16	1	MP576010	ASSY, CHARGER, LITHIUM, 350BU
17	2	NB003200	BOLT, HEX, 1/4-20 X 5/8, ZN
18	2	NB007000	NUT, NYLOCK, #4-40
19	4	NB020500	SCREW, BH, #10-24 X 5/8
20	1	NB028300	BUSHING, CABLE, BAIL
21	4	NB048300	WASHER, FLAT, #4
22	3	NB050300	BOLT, HEX, 1/4-28 X 5/8, ZN
23	1	NB063300	BOLT, HEX, #10-24 X 1, ZN
24	2	NB071400	WASHER, GROUND, 1/4"
25	1	NB3267	NUT, NYLOCK, 3/8-16
26	9	NB3350	WASHER, FLAT, SAE, 1/4, ZN
27	1	NB3450	WASHER, FLAT, SAE, 3/8, ZN
28	5	NB6110	WASHER, LOCK, SPLIT, 1/4, ZN
29	2	NB9625	SCREW, PAN, PH, #4-40 X 3/4, ZN
30	1	NB9645	WASHER, FLAT, SAE, #10
31	1	NB9735	NUT, NYLOCK, #10-24

1 Eclipse Road, Sparta, NC 28675
800.367.3550 | +1.336.372.8080

EC DECLARATION OF CONFORMITY

according to
EC Machinery Directive 2006/42/EC

We, Amano Pioneer Eclipse Corp. (1 Eclipse Road, P.O. Box 909, Sparta NC28675, USA) with authorized EU representative (see info under section importer) declare under our sole responsibility that the following described equipment in our delivered version complies with the appropriate basic safety and health requirements of the above-mentioned Directives based on its design and type, as brought into circulation by us. In case of alteration of the machine, not agreed upon by us, this declaration will lose its validity.

Applicable EC Directives:	EC Machinery Directive 2006/42/EC, EC Low Voltage Directive (2006/95/EC) EC Restriction of Hazardous Substances Directive (2002/95/EC)	
Applicable Harmonized Standards:	ISO 12100-1 ISO 12100-2 EN 60335-2-67	EN 1050 EN 60335-1 BS 5415
Type of Equipment:	Battery Powered Floor Finishing	
Model Number(s):	350BU28LI	
Description(s):	28” Battery Burnisher	
Serial Number:	101037	
Year in which CE marking was affixed:	2023	

Place: Sparta

Date: 04/05/2023

Signature: Leisa Rector

Name: Leisa Rector

Position: International Operations Coordinator

Importer’s Name:

Importer’s Address:

Date:

Name and Signature:

Amano Pioneer Eclipse Corporation

1 Eclipse Rd ● PO Box 909
Sparta, North Carolina 28675 ● USA
www.pioneereclipse.com

+1-336-372-8080
1-800-367-3550
Fax +1-336-372-2913

EC Machinery Directive 2006/42/EC,
EC Restriction of Hazardous Substances Directive (2011/65/EU)
Harmonized Standards Applied: EN 12100-1, EN12100-2

© 2026 Amano Pioneer Eclipse Corporation

LT090200
350BU_F
070726